ULTRA-SLIM RANGE

Meta 25 RECESSED

one·au·

DIFFUSER SHOWN

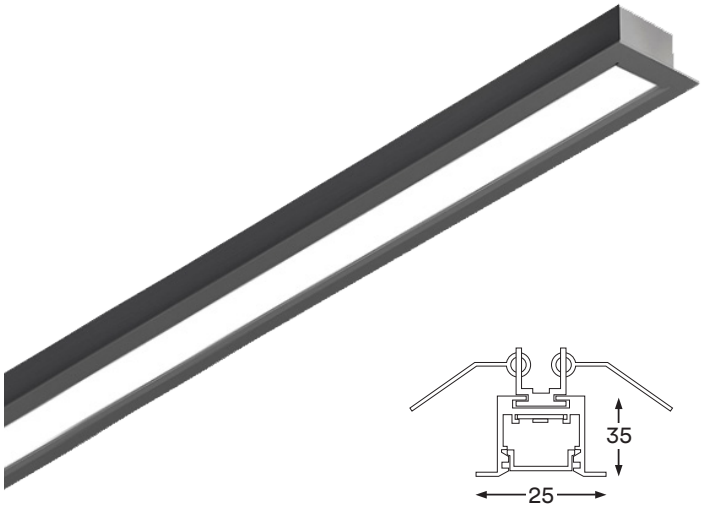

FEATURES

- Light aperture of just 25mm width
- Combinations of different optics possible
- Variety of outputs and configurations for every project

24V DC
POWER SUPPLIES SOLD SEPARATELY

IP20
Ingress Protection

Power Integrated Suspension Cable

ACCESSORIES

T Connection

Cross Connection

L Connection

Joiners

Blanking Covers

Spring Clips

FINISHES

- ☐ Black
- ☐ White
- ☐ Anodized Aluminium

COLOUR TEMPERATURES

- 2700K ☐
- 3000K ☐
- 4000K ☐

OPTICS

- Diffuser ☐
- Microprism Lens ☐
- Baffle 30° ☐
- Baffle 60° ☐
- Asymmetric ☐
- Batwing ☐

MOUNTING

- Recessed ☐

DIMMING OPTIONS

- DALI ☐
- 0-10V ☐
- Other ☐ PLEASE SPECIFY

MODULE LENGTHS (mm)

Diffuser & Microprism

- 209
- 609
- 1209
- 1509
- 1809
- 2409

MODULE LENGTHS (mm)

Baffles

- 198
- 581
- 1186
- 1443
- 1730
- 2397

info@luxfx.com.au
03 9417 6986

ULTRA-SLIM RANGE

Meta 25 RECESSED

one·au·

OUTPUTS

4000K

Optic	Power (W)	Voltage	CRI	Lm/watt	Lm/meter
Diffused	20	24V	>90	103	2069
Microprism	20	24V	>90	102	2043
Baffle 30°	20	24V	>90	69	1373
Baffle 60°	20	24V	>90	55	1099
Solid Acrylic	20	24V	>90	96	1925

DISTRIBUTIONS

DIFFUSE

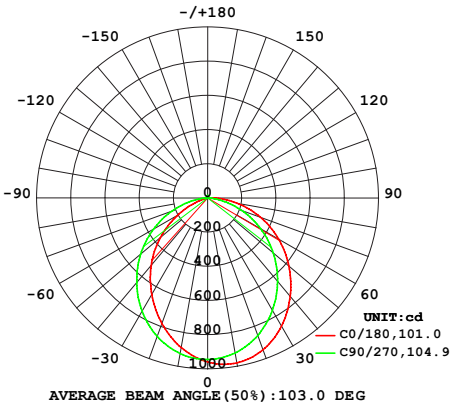

MICROPRISM

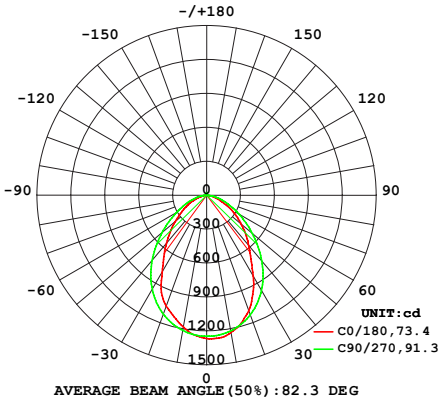

SOLID ACRYLIC

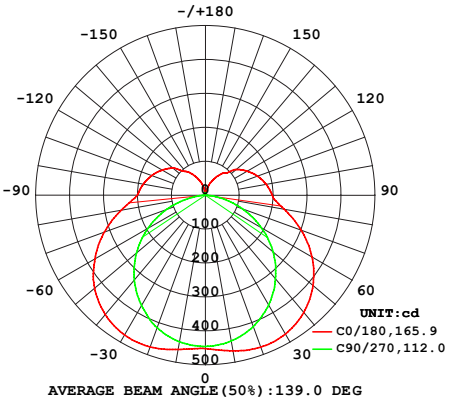

BAFFLE 30°

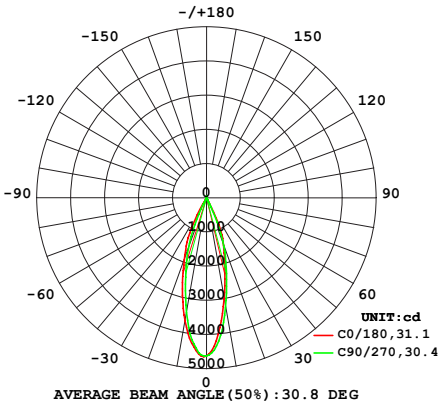

BAFFLE 60°

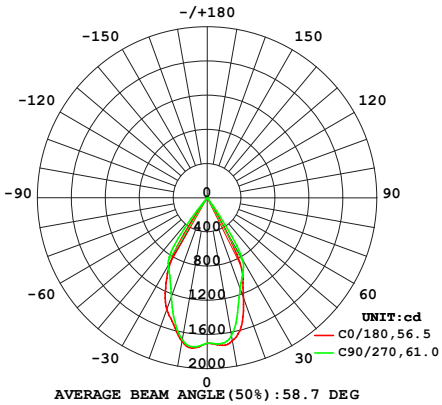

info@luxfx.com.au
03 9417 6986

Meta 25 RECESSED

one·au·

UNIFIED GLARE RATING (UGR) – BAFFLE 30°

ceiling/cavity		0.7	0.7	0.5	0.5	0.3	0.7	0.7	0.5	0.5	0.3
walls		0.5	0.3	0.5	0.3	0.3	0.5	0.3	0.5	0.3	0.3
working plane		0.2	0.2	0.2	0.2	0.2	0.2	0.2	0.2	0.2	0.2
Room dimensions		Viewed crosswise					Viewed endwise				
x = 2H	y = 2H	1.0	1.7	1.2	1.9	2.1	1.2	2.0	1.5	2.2	2.3
	3H	0.8	1.5	1.1	1.7	1.9	1.1	1.8	1.4	2.0	2.2
	4H	0.7	1.4	1.0	1.6	1.9	1.0	1.7	1.3	1.9	2.2
	6H	0.6	1.3	1.0	1.5	1.8	1.0	1.6	1.3	1.8	2.1
	8H	0.6	1.2	0.9	1.5	1.7	0.9	1.5	1.3	1.8	2.1
	12H	0.6	1.1	0.9	1.4	1.7	0.9	1.5	1.3	1.8	2.1
4H	2H	0.7	1.4	1.0	1.6	1.9	1.0	1.6	1.3	1.9	2.1
	3H	0.6	1.1	0.9	1.4	1.7	0.8	1.4	1.2	1.7	2.0
	4H	0.5	1.0	0.8	1.3	1.6	0.8	1.3	1.1	1.6	1.9
	6H	0.4	0.8	0.8	1.2	1.5	0.7	1.2	1.1	1.5	1.9
	8H	0.3	0.7	0.7	1.1	1.5	0.7	1.1	1.1	1.5	1.9
	12H	0.3	0.6	0.7	1.0	1.5	0.7	1.0	1.1	1.4	1.9
8H	4H	0.3	0.7	0.7	1.1	1.5	0.6	1.0	1.0	1.4	1.8
	6H	0.2	0.5	0.6	1.0	1.4	0.5	0.9	1.0	1.3	1.8
	8H	0.1	0.4	0.6	0.9	1.4	0.5	0.8	1.0	1.3	1.7
	12H	0.1	0.3	0.6	0.8	1.3	0.5	0.8	1.0	1.2	1.7
12H	4H	0.3	0.6	0.7	1.0	1.5	0.5	0.9	1.0	1.3	1.7
	6H	0.1	0.4	0.6	0.9	1.4	0.5	0.8	0.9	1.2	1.7
	8H	0.1	0.3	0.6	0.8	1.3	0.5	0.7	0.9	1.2	1.7
Variations with the observer position at spacings:											
S = 1.0H		+ 2.8 / -12.2					+ 2.5 / - 5.9				
1.5H		+ 3.7 / - 7.5					+ 3.4 / - 5.2				
2.0H		+ 5.4 / -11.7					+ 4.7 / - 4.9				

UNIFIED GLARE RATING (UGR) – BAFFLE 60°

ceiling/cavity		0.7	0.7	0.5	0.5	0.3	0.7	0.7	0.5	0.5	0.3
walls		0.5	0.3	0.5	0.3	0.3	0.5	0.3	0.5	0.3	0.3
working plane		0.2	0.2	0.2	0.2	0.2	0.2	0.2	0.2	0.2	0.2
Room dimensions		Viewed crosswise					Viewed endwise				
x = 2H	y = 2H	5.7	6.6	6.0	6.8	7.0	10.9	11.7	11.1	11.9	12.1
	3H	5.6	6.4	5.8	6.6	6.8	10.7	11.5	11.0	11.7	11.9
	4H	5.5	6.2	5.8	6.5	6.7	10.6	11.4	10.9	11.6	11.8
	6H	5.4	6.1	5.7	6.4	6.6	10.5	11.2	10.8	11.5	11.8
	8H	5.3	6.0	5.7	6.3	6.6	10.5	11.1	10.8	11.4	11.7
	12H	5.3	6.0	5.6	6.2	6.5	10.4	11.1	10.8	11.4	11.7
4H	2H	5.5	6.2	5.8	6.5	6.7	10.6	11.4	10.9	11.6	11.8
	3H	5.3	6.0	5.6	6.2	6.5	10.4	11.1	10.8	11.4	11.7
	4H	5.2	5.8	5.6	6.1	6.5	10.3	10.9	10.7	11.2	11.6
	6H	5.1	5.6	5.5	6.0	6.4	10.2	10.7	10.6	11.1	11.5
	8H	5.0	5.5	5.5	5.9	6.3	10.2	10.6	10.6	11.0	11.4
	12H	5.0	5.4	5.4	5.8	6.2	10.1	10.5	10.5	10.9	11.4
8H	4H	5.0	5.5	5.5	5.9	6.3	10.2	10.6	10.6	11.0	11.4
	6H	4.9	5.3	5.4	5.8	6.2	10.1	10.4	10.5	10.9	11.3
	8H	4.9	5.2	5.4	5.7	6.1	10.0	10.3	10.5	10.8	11.3
	12H	4.8	5.1	5.3	5.6	6.1	9.9	10.2	10.4	10.7	11.2
12H	4H	5.0	5.4	5.4	5.8	6.2	10.1	10.5	10.5	10.9	11.4
	6H	4.9	5.2	5.4	5.7	6.1	10.0	10.3	10.5	10.8	11.3
	8H	4.8	5.1	5.3	5.6	6.1	9.9	10.2	10.4	10.7	11.2
Variations with the observer position at spacings:											
S = 1.0H		+ 3.4 / -15.2					+ 6.4 / -18.3				
1.5H		+ 4.9 / -12.7					+ 8.9 / -13.7				
2.0H		+ 5.9 / -11.4					+ 5.3 / -11.5				